WCE30 240V WALL CHASER IN2

4933383855 - WCE30 - 4000383856



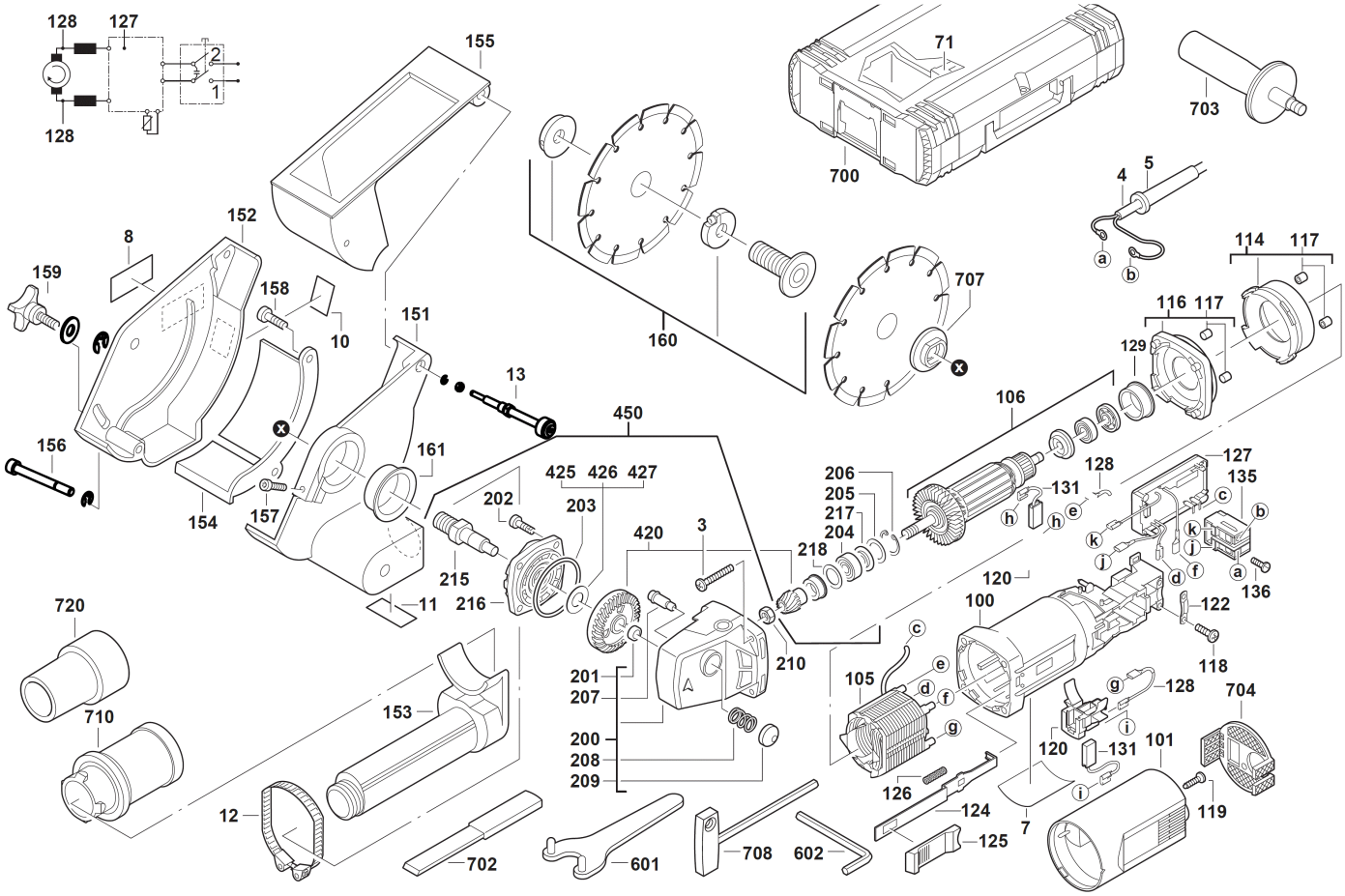
128
127
2
1
128
155
71
703
700
4
5
a
b
152
8
159
158
10
151
160
707
114
117
116
117
129
13
450
106
156
161
425
426
427
206
205
217
204
128
131
127
135
154
157
202
203
420
3
218
h
h
e
c
b
k
k
j
j
d
f
a
136
215
216
11
120
100
122
720
c
210
118
e
105
d
f
g
128
704
201
207
153
g
i
710
200
208
209
120
131
101
126
124
i
119
12
7
125
702
601
708
602

Position	Quantity	Description	Part number	EAN
0003 1	4	SCREW D 7981 3,9X32	4931621515	4002395695508
0004 2	1	CONNECTION CABLE	4931623861	4002395704293
0005 3	1	CABLE ENTRY SLEEVE	4931218785	4002395583805
0007 4	1	RATING PLATE	4931476737	4058546391843
0008 5	1	NAME PLATE	4931383017	4002395692286
0010 6	1	DATA PLATE	4931334659	4002395616305
0011 7	1	DATA PLATE	4931334660	4002395616312
0012 8	1	LATCH PLATE	4931334664	4002395616329
0013 9	1	THREADED PIN	4931463109	4058546243500
0071 10	1	INSERT	4931378697	4002395684427
0100 11	1	HOUSING SET ASSY	4931449153	4002395151943
0101 12	1	HOUSING CAP	4931407395	4002395790852
0105 13	1	ELECTRIC FIELD	4931442728	4002395884582
0106 14	1	ARMATURE	4931442662	4002395883196
0114 15	1	Not available for this version	1000000003	
0116 16	1	INTERMEDIATE FLANGE	4931369787	4002395674190
0117 17	2	HOLDING-DOWN DEVICE	4931409768	4002395847617
0118 18	2	SCREW	4931624538	4002395760039
0119 19	1	SCREW D 7985 M 4X16	4931619914	4002395695225
0120 20	2	BRUSH HOLDER	4931326923	4002395607778
0122 21	1	CABLE COLLAR	4931256500	4002395586547
0124 22	1	GUIDE PIECE	4931326959	4002395607877
0125 23	1	SLIDER	4931455746	4002395176694
0126 24	1	PRESSURE SPRING	4931326981	4002395607945
0127 25	1	ELECTRONIC ELEMENT	4931362699	4002395661398
0128 26	2	WIRE	4931623738	4002395703692
0129 27	1	BEARING SLEEVE	4931326953	4002395607846
0131 28	1	CARBON BRUSH SET	4931369477	4002395673476
0135 29	1	SWITCH	4931326976	4002395607938
0136 30	2	SCREW D 85 AM 3,5X5	4931617313	4002395694761
0151 31	1	SUCTION CAP	4931476185	4058546342715
0152 32	1	GUARD CAP	4931476110	4058546342500
0153 33	1	CONNECTION	4931476118	4058546388850
0154 34	1	AIR DEFLECTOR RING	4931476112	4058546342524
0155 35	1	ALTITUDE ADJUSTMENT	4931476113	4058546342531
0156 36	1	SCREW	4931449441	4002395258628
0157 37	1	SCREW	4931622928	4002395699735
0158 38	2	SCREW D 912 M 4X8 GAL	4931617290	4002395694747
0159 39	1	GRIP	4931449442	4002395258635
0160 40	1	TENSIONING DEVICE	4931449155	4002395258185
0161 41	1	ISOLATION SLAFE	4931362742	4002395661473
0200 42	1	GEAR BOX	4931412193	4002395798919
0201 43	1	SLEEVE N874989 HKO 0810	4931912093	4002395706464
0202 44	4	SCREW	4931317532	4002395600175
0203 45	1	COMPENSATING WASHER	4931254894	4002395586448
0204 46	1	GROOVED BALL BEAR.	4931368037	4002395670642
0205 47	1	DISC	4931622761	4002395699056
0206 48	1	LOCKING RING	4931616614	4002395694624
0207 49	1	LOCKING BOLT	4931326929	4002395607785
0208 50	1	PRESSURE SPRING	4931326942	4002395607822

Position	Quantity	Description	Part number	EAN
0209 51	1	PUSH-BUTTON	4931326930	4002395607792
0210 52	1	NUT	4931326952	4002395607839
0215 53	1	SPINDLE	4931409809	4002395838691
0216 54	1	BEARING END PLATE	4931385801	4002395720705
0217 55	1	WASHER	4931624287	4002395732098
0218 56	1	WASHER	4931362085	4002395660254
0420 57	1	BEVEL GEAR PAIR	4931369887	4002395674398
0425 58	1	DISC N874237 12,2X22X0,1	4931808473	4002395727544
0426 59	1	DISC N874237 12,2X22X0,2	4931925940	4002395706624
0427 60	1	DISC	4931624256	4002395723379
0450 61	1	DRIVE GEAR	4931391477	4002395735891
0602 62	1	SCREW DRIVER	4931606753	4002395693757
0707 63	1	CLAMPING FLANGE	4931348960	4002395773084
0708 64	1	T-SPANNER	4931362928	4002395661879
0720 65	1	NOSEPIECE	4931419658	4002395840359
0601 66	1	PIN SPANNER 115-230/WP/WSAP1 A/M	4932367712	4002395338467
0700 67	1	CARRYING CASE SIZE2 MET	Item discontinued(4932383162)	
0702 68	1	BREAK-OUT CHISEL DME P1 AEG	Item discontinued(4932371358)	
0703 69	1	HANDLE	4932409546	4002395370870
0710 70	1	ADAPTER DME P1 AEG	4932362778	4002395334285