M18FMT-502X FUEL M18 MULTITOOL IN2

4933478492 - M18FMT-502X - 4000483338



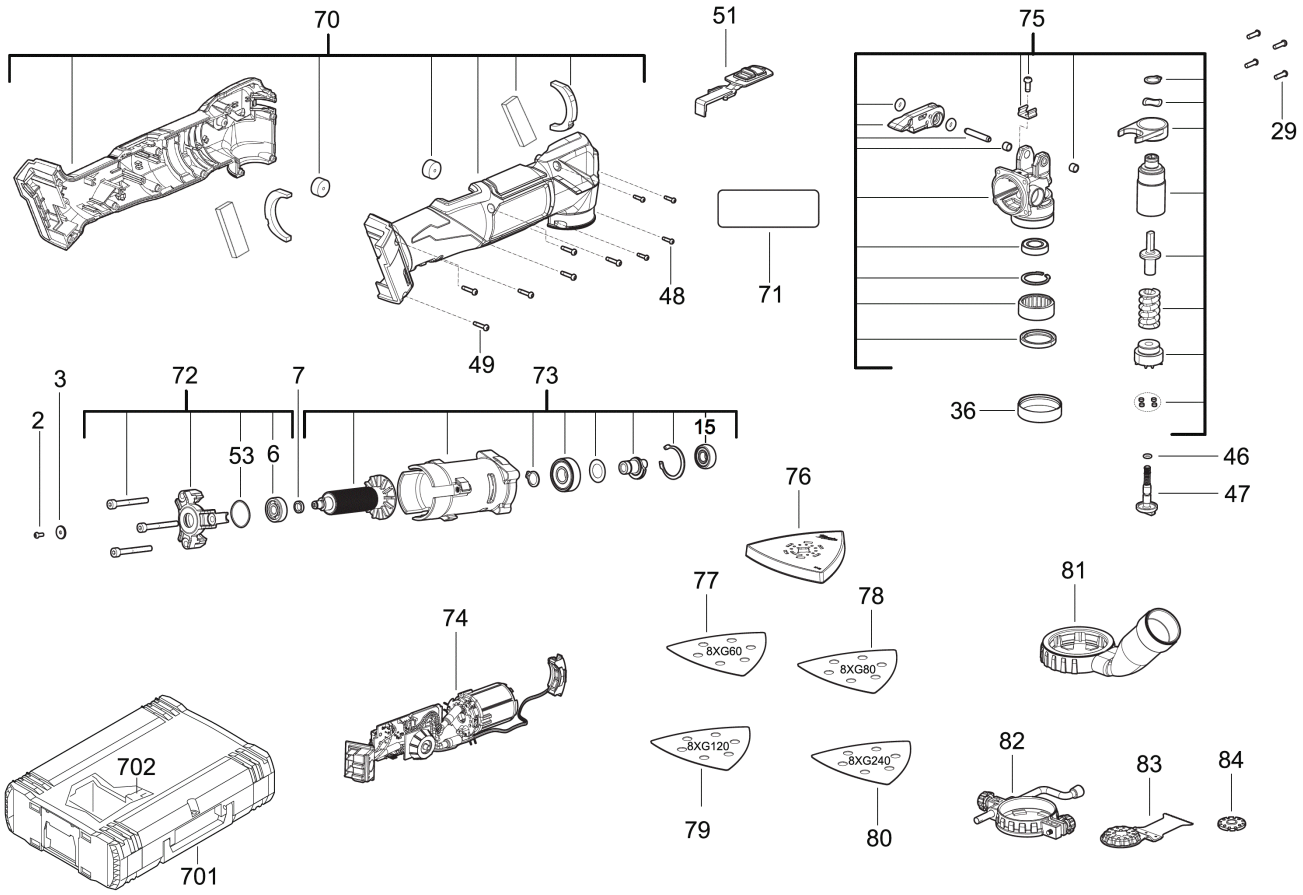
70
51
75
29
48
71
49
3
72
7
73
2
53
6
15
36
46
47
76
77
78
81
8XG60
8XG80
74
8XG120
8XG240
82
83
84
702
79
80
701

Position	Quantity	Description	Part number	EAN
0002 1	1	SCREW	4931465506	4058546236069
0003 2	1	WASHER	4931473916	4058546364847
0006 3	1	BALL BEARING	4931473917	4058546364854
0007 4	1	BUSH	4931473918	4058546364861
0015 5	1	BALL BEARING	4931506971	4058546594824
0029 6	4	SCREW	4931465883	4058546239831
0036 7	1	RUBBER SLEEVE	4931473919	4058546364878
0046 8	1	O-RING	4931473392	4058546352684
0047 9	1	FASTENING BOLT	4931473393	4058546352691
0048 10	4	SCREW	4931447534	4002395882823
0049 11	6	SCREW	660570005	4002395827329
0051 12	1	SLIDE	4931473920	4058546364885
0053 13	1	O-RING	4931473921	4058546364892
0070 14	1	HOUSING	4931495793	4058546494612
0071 15	1	RATING PLATE	4931479356	4058546386719
0072 16	1	MOTOR PLATE	4931473924	4058546364922
0073 17	1	MOTOR ASSEMBLY	4931473925	4058546364939
0074 18	1	ELECTRONIC	4931473926	4058546364946
0075 19	1	GEAR CASE	4931473927	4058546364953
0076 20	1	GRINDING DISK	4931447574	4002395882960
0077 21	1	Sand Paper D HL 93x93/6 G60-8pc	48902060	45242349166
0078 22	1	Sand Paper D HL 93x93/6 G80-8pc	Item discontinued(48902080)	
0079 23	1	Sand Paper D HL 93x93/6 G120-8pc	48902120	45242349135
0080 24	1	Sand Paper D HL 93x93/6 G240-8pc	Item discontinued(48902240)	
0081 25	1	DUST EXTR.CONNECTOR	4931473396	4058546352721
0082 26	1	DEPTH GAUGE	4931473397	4058546352738
0083 27	1	BLADE	4931473395	4058546352714
0084 28	1	ADAPTER DISC	4931473394	4058546352707
0702 29	1	INSERT	4931473928	4058546364960