# MXFPTR2-601 STATIONARY PIPE THREADER IN2

## 4933492100 - MXFPTR2-601 - 4000497245

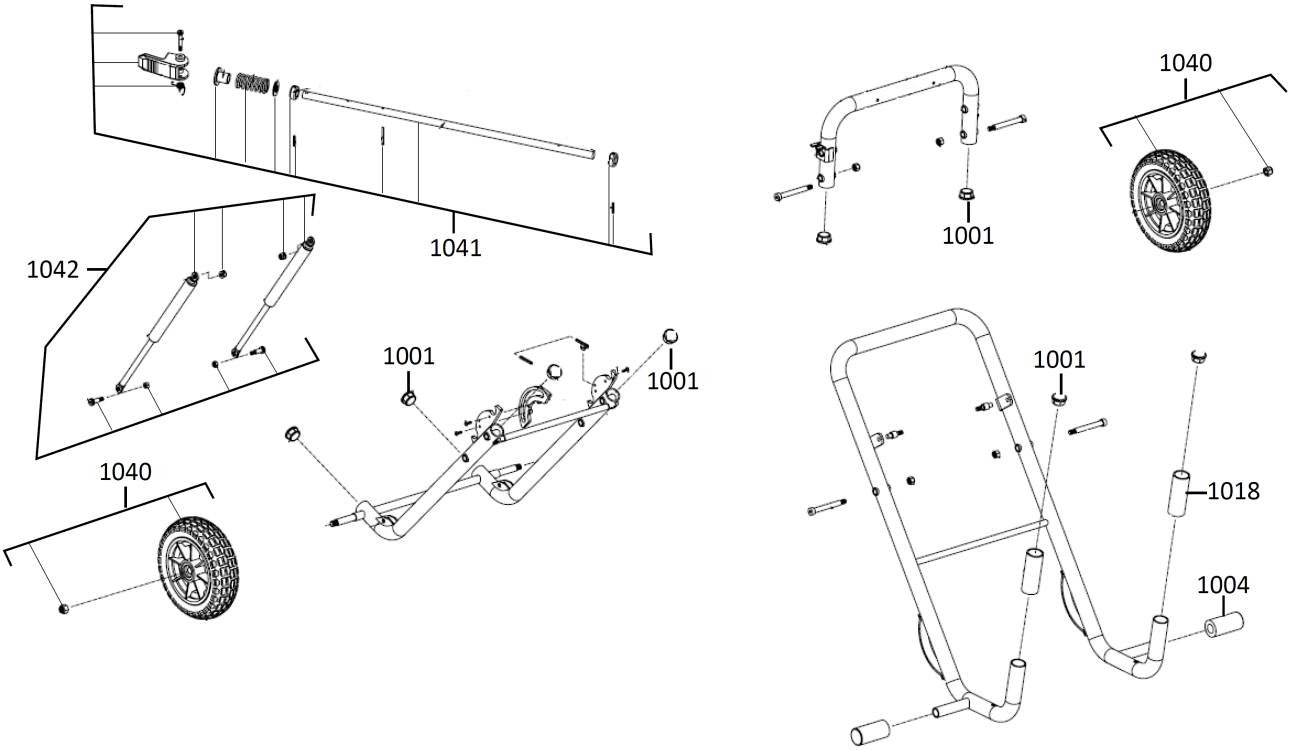
1041
1042
1001
1001
1040
1001
1040
1001
1018
1004

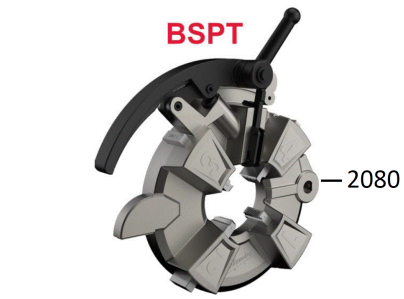
BSPT
2080

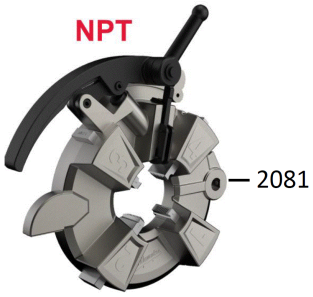
NPT
2081

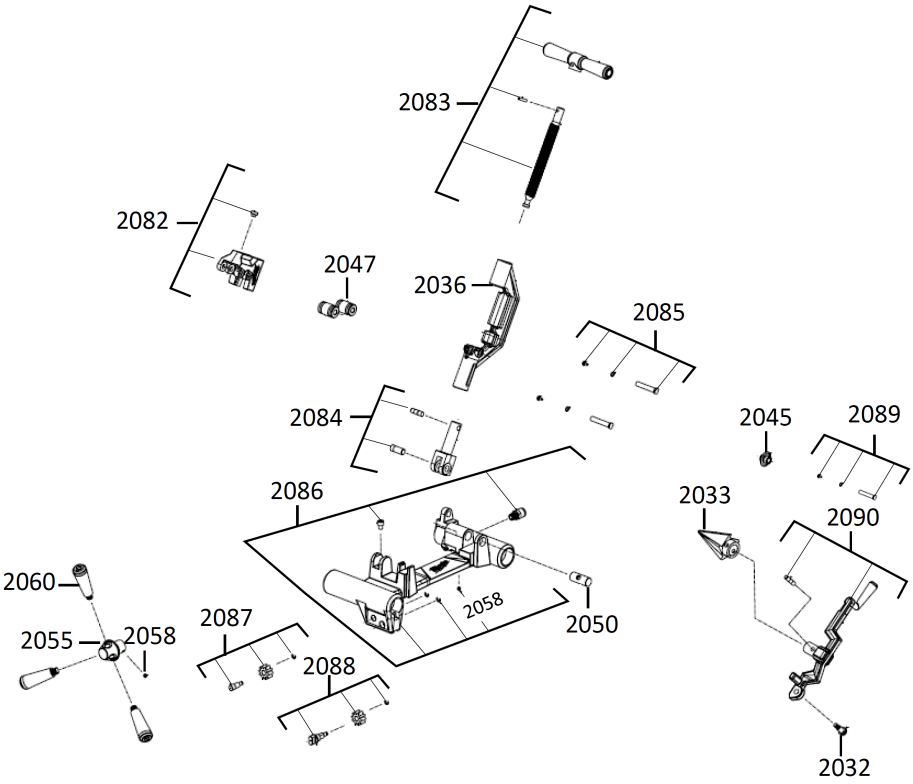
2083
2082
2047
2036
2085
2084
2045
2089
2086
2033
2090
2060
2058
2050
2055
2058
2087
2088
2032

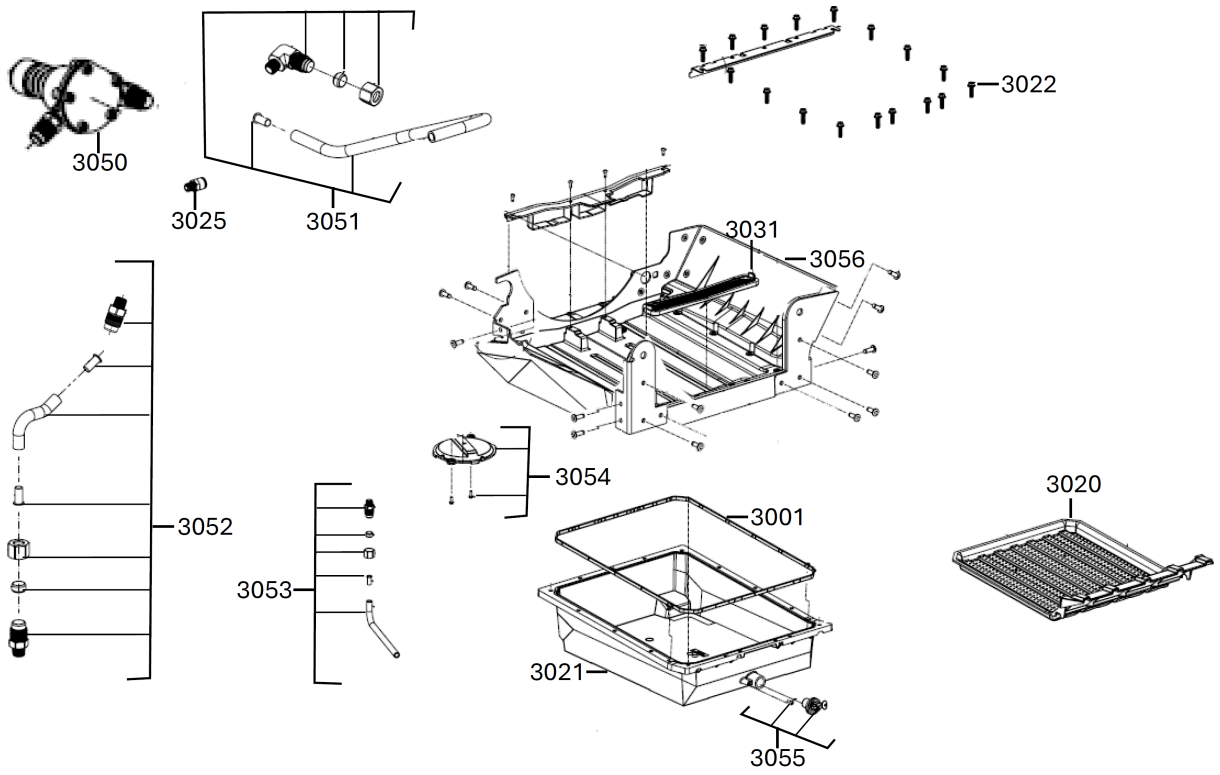
3050
3025
3051
3022
3031
3056
3052
3054
3053
3001
3020
3021
3055

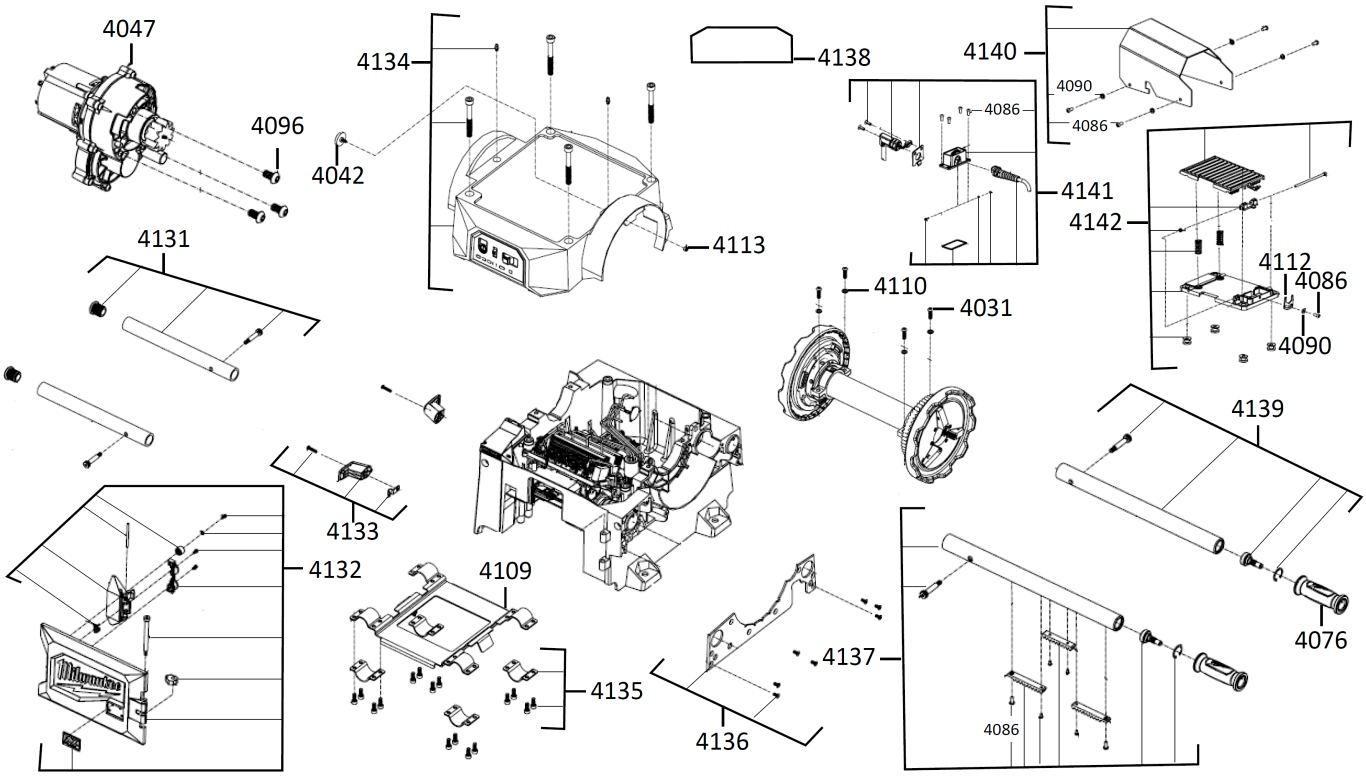
4047
4096
4042
4134
4113
4138
4140
4090
4086
4086
4141
4142
4112
4086
4090
4131
4110
4031
4139
4133
4132
4109
4135
4136
4137
4086
4076

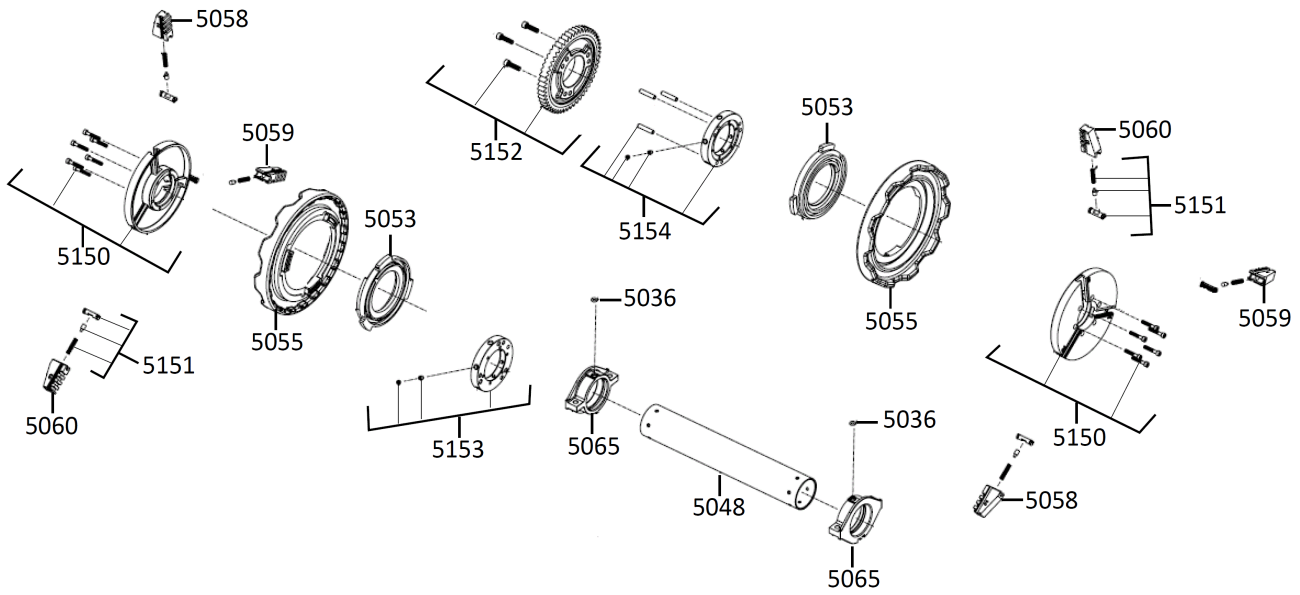
5058
5059
5053
5150
5055
5151
5060
5152
5154
5053
5055
5060
5151
5059
5036
5153
5065
5048
5036
5065
5150
5058

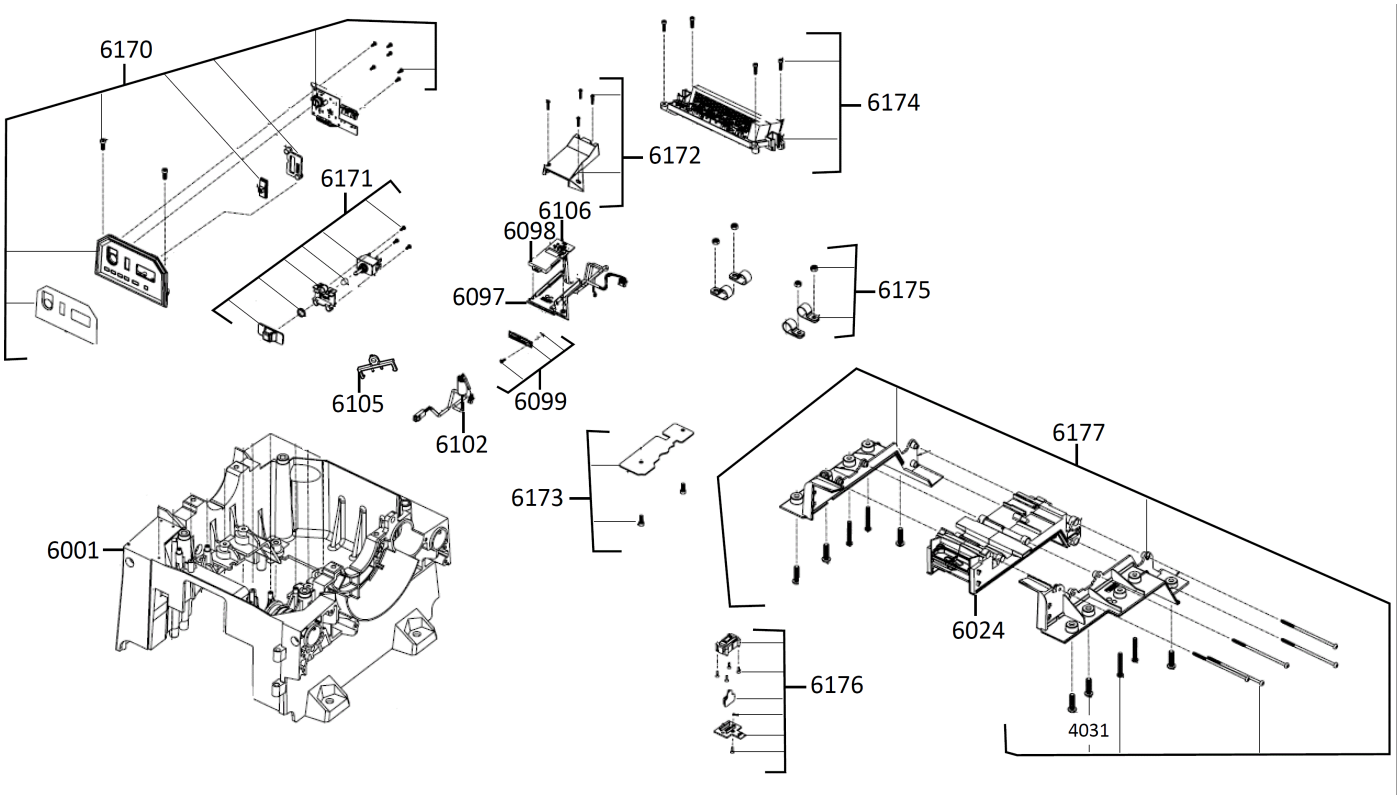
6170
6171
6174
6172
6106
6098
6097
6175
6105
6102
6099
6173
6001
6177
6024
6176
4031

| Position | Quantity | Description | Part number | EAN |
|---|---|---|---|---|
| 1001 1 | 8 | GUARD CAP | 4931496643 | 4058546537807 |
| 1004 2 | 2 | RUBBER FOOT | 4931496644 | 4058546537814 |
| 1018 3 | 2 | GRIP PART | 4931496645 | 4058546537821 |
| 1040 4 | 2 | WHEEL | 4931496646 | 4058546537838 |
| 1041 5 | 1 | LOCK RELEASE KIT | 4931496647 | 4058546537845 |
| 1042 6 | 1 | SHOCK ABSORBER | 4931496648 | 4058546537852 |
| 2032 7 | 1 | BOLT | 4931496649 | 4058546537869 |
| 2033 8 | 1 | Reamer Cone for MX 2IN Pipe Threader | 49165105 | 45242833634 |
| 2036 9 | 1 | CUTTER | 4931496650 | 4058546537876 |
| 2045 10 | 1 | Pipe Cutter Wheel f. Stat. 2in Threader | 48361401 | 45242745920 |
| 2047 11 | 2 | BUSHING | 4931496651 | 4058546537883 |
| 2050 12 | 1 | PIN | 4931496652 | 4058546537890 |
| 2055 13 | 1 | HUB | 4931496653 | 4058546537906 |
| 2058 14 | 2 | SCREW | 4931496654 | 4058546537913 |
| 2060 15 | 3 | KNOB HANDLE | 4931496655 | 4058546537920 |
| 2082 16 | 1 | CUTTER | 4931496656 | 4058546537937 |
| 2083 17 | 1 | HANDLE SET | 4931496657 | 4058546537944 |
| 2084 18 | 1 | CONNECTOR | 4931496658 | 4058546537951 |
| 2085 19 | 2 | PIN | 4931496659 | 4058546537968 |
| 2086 20 | 1 | CARRIAGE | 4931496660 | 4058546537975 |
| 2087 21 | 1 | PIN | 4931496661 | 4058546537982 |
| 2088 22 | 1 | PINION | 4931496662 | 4058546537999 |
| 2089 23 | 1 | WHEEL | 4931496663 | 4058546538002 |
| 2090 24 | 1 | ROCKER ARM | 4931496664 | 4058546538019 |
| 3001 25 | 1 | SEAL | 4931496665 | 4058546538026 |
| 3020 26 | 1 | COARSE SMUT FILTER | 4931496666 | 4058546538033 |
| 3021 27 | 1 | TANK | 4931506816 | 4058546561307 |
| 3022 28 | 17 | SCREW | 4931506817 | 4058546561314 |
| 3025 29 | 1 | ADAPTER | 4931496667 | 4058546538040 |
| 3031 30 | 1 | INSERT | 4931496668 | 4058546538057 |
| 3050 31 | 1 | OIL PUMP | 4931496669 | 4058546538064 |
| 3051 32 | 1 | TUBE | 4931496670 | 4058546538071 |
| 3052 33 | 1 | TUBE | 4931496671 | 4058546538088 |
| 3053 34 | 1 | TUBE | 4931496672 | 4058546538095 |
| 3054 35 | 1 | LID | 4931496673 | 4058546538101 |
| 3055 36 | 1 | PLUG | 4931496674 | 4058546538118 |
| 3056 37 | 1 | HOUSING | 4931506818 | 4058546561321 |
| 4031 38 | 10 | SCREW | 4931496675 | 4058546538125 |
| 4042 39 | 1 | BOLT | 4931496676 | 4058546538132 |
| 4047 40 | 1 | GEAR BOX | 4931496677 | 4058546538149 |
| 4076 41 | 2 | HANDLE | 4931496678 | 4058546538156 |
| 4086 42 | 11 | SCREW | 4931496679 | 4058546538163 |
| 4090 43 | 5 | WASHER | 4931496680 | 4058546538170 |
| 4096 44 | 3 | SCREW | 4931496681 | 4058546538187 |
| 4109 45 | 1 | PLATE | 4931496682 | 4058546538194 |
| 4110 46 | 4 | WASHER | 4931494491 | 4058546470630 |
| 4112 47 | 1 | LOCKING PART | 4931496683 | 4058546538200 |
| 4113 48 | 1 | NUT | 4931496684 | 4058546538217 |
| 4131 49 | 2 | TUBE | 4931496685 | 4058546538224 |
| 4132 50 | 1 | HOUSING FOR BATTERY | 4931496686 | 4058546538231 |

| Position | Quantity | Description | Part number | EAN |
|---|---|---|---|---|
| 4133 51 | 2 | BRACKET | 4931496687 | 4058546538248 |
| 4134 52 | 1 | HOUSING | 4931496688 | 4058546538255 |
| 4135 53 | 4 | CLAMP | 4931496689 | 4058546538262 |
| 4136 54 | 1 | HOUSING | 4931496690 | 4058546538279 |
| 4137 55 | 1 | HANDLE LEFT | 4931496691 | 4058546538286 |
| 4138 56 | 1 | RATING PLATE | 4931496692 | 4058546538293 |
| 4139 57 | 1 | HANDLE RIGHT | 4931496693 | 4058546538309 |
| 4140 58 | 1 | GUARD | 4931496694 | 4058546538316 |
| 4141 59 | 1 | COVER | 4931496695 | 4058546538323 |
| 4142 60 | 1 | PLATE | 4931496696 | 4058546538330 |
| 5036 61 | 2 | BUSHING | 4931496697 | 4058546538347 |
| 5048 62 | 1 | GUIDE TUBE | 4931496698 | 4058546538354 |
| 5053 63 | 2 | BUSHING | 4931496699 | 4058546538361 |
| 5055 64 | 2 | CLUTCH WHEEL | 4931496700 | 4058546538378 |
| 5058 65 | 2 | JAW | 4931496701 | 4058546538385 |
| 5059 66 | 2 | JAW | 4931496702 | 4058546538392 |
| 5060 67 | 2 | JAW | 4931496703 | 4058546538408 |
| 5065 68 | 2 | BUSHING | 4931496704 | 4058546538415 |
| 5150 69 | 2 | GUIDE DISC | 4931496705 | 4058546538422 |
| 5151 70 | 6 | CLAMPING SET | 4931496706 | 4058546538439 |
| 5152 71 | 1 | WORM GEAR WHEEL | 4931496707 | 4058546538446 |
| 5153 72 | 1 | HOLDING RING | 4931496708 | 4058546538453 |
| 5154 73 | 1 | HOLDING RING | 4931496709 | 4058546538460 |
| 6001 74 | 1 | HOUSING BOTTOM | 4931496710 | 4058546538477 |
| 6024 75 | 1 | HOUSING FOR BATTERY | 4931496711 | 4058546538484 |
| 6097 76 | 1 | COVER | 4931496712 | 4058546538491 |
| 6098 77 | 1 | INSERT CARD | 4931496713 | 4058546538507 |
| 6099 78 | 1 | NAME PLATE | 4931496714 | 4058546538514 |
| 6102 79 | 1 | CONNECTOR | 4931496715 | 4058546538521 |
| 6105 80 | 3 | CLAMP CLIP | 4931472938 | 4058546332402 |
| 6106 81 | 1 | ELECTRONIC | 4931496716 | 4058546538538 |
| 6170 82 | 1 | ELECTRONIC | 4931496717 | 4058546538545 |
| 6171 83 | 1 | ELECTRONIC | 4931496718 | 4058546538552 |
| 6172 84 | 1 | COVER | 4931496719 | 4058546538569 |
| 6173 85 | 1 | COVER | 4931496720 | 4058546538576 |
| 6174 86 | 1 | ELECTRONIC | 4931496721 | 4058546538583 |
| 6175 87 | 4 | CABLE COLLAR | 4931496722 | 4058546538590 |
| 6176 88 | 1 | SWITCH BOARD | 4931496723 | 4058546538606 |
| 6177 89 | 1 | COVER ASSY | 4931496724 | 4058546538613 |