MXFPTR2-601 STATIONARY PIPE THREADER IN2

4933492100 - MXFPTR2-601 - 4000497245

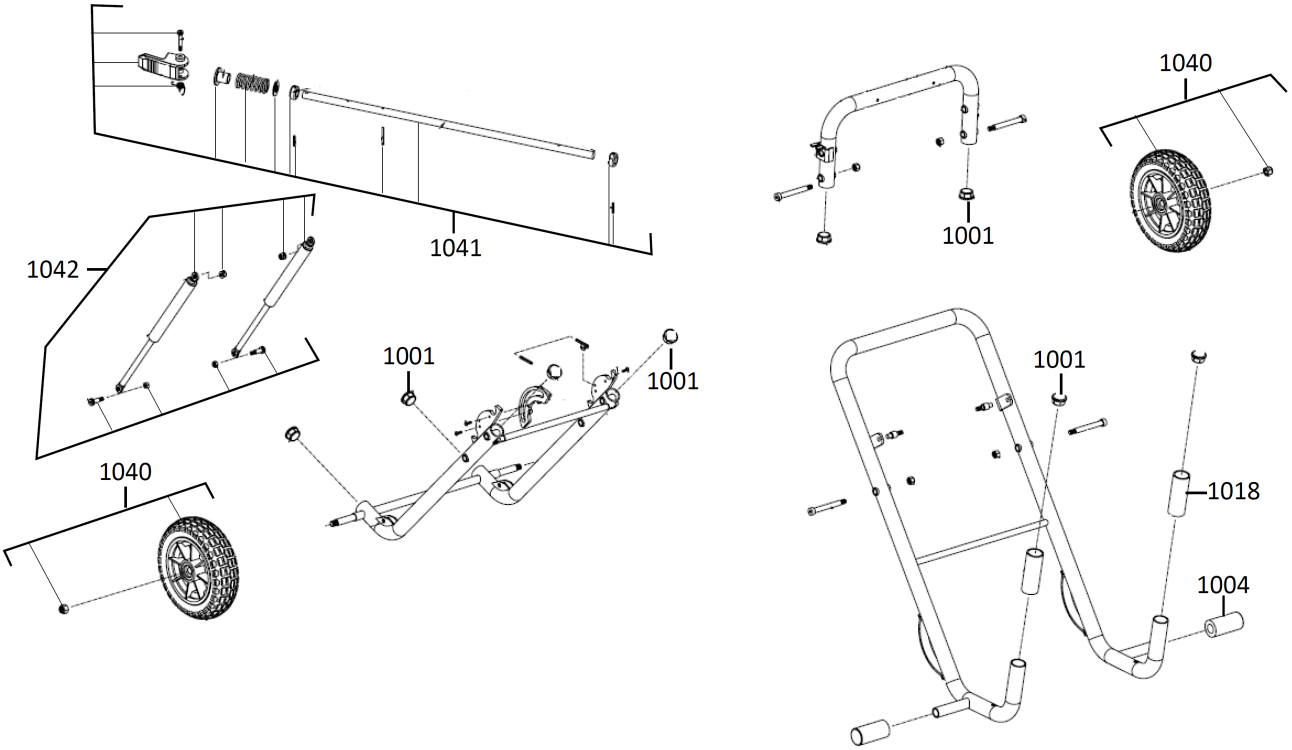
1041
1042
1001
1001
1040
1001
1040
1001
1018
1004

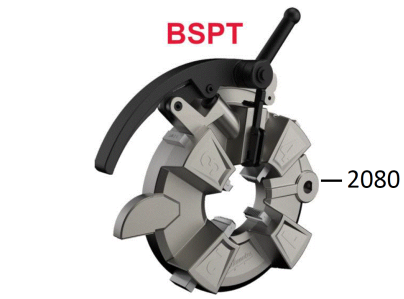
BSPT
2080

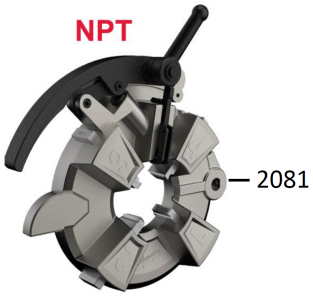
NPT
2081

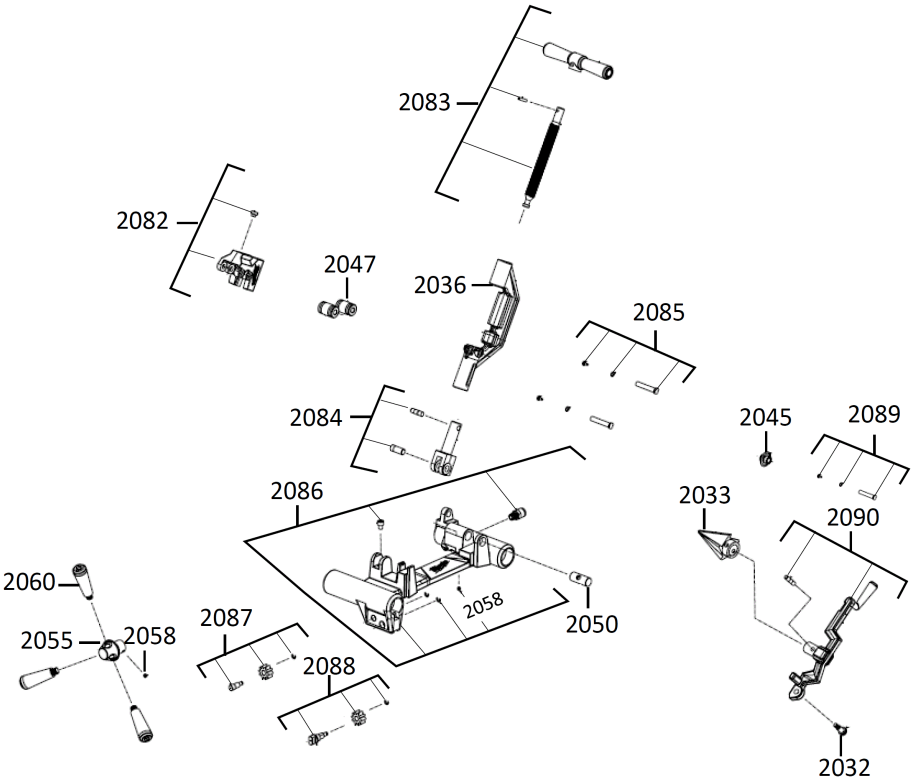
2083
2082
2047
2036
2085
2084
2045
2089
2086
2033
2090
2060
2058
2050
2055
2058
2087
2088
2032

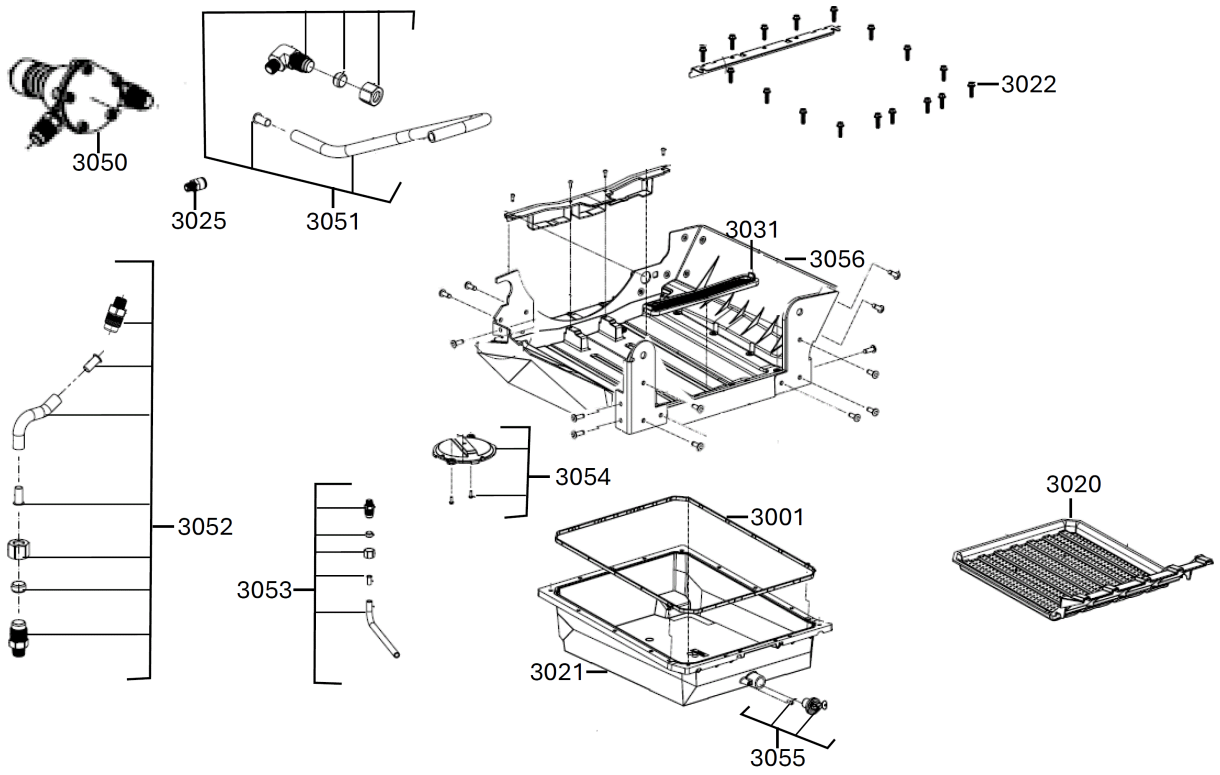
3050
3025
3051
3022
3031
3056
3052
3054
3053
3001
3020
3021
3055

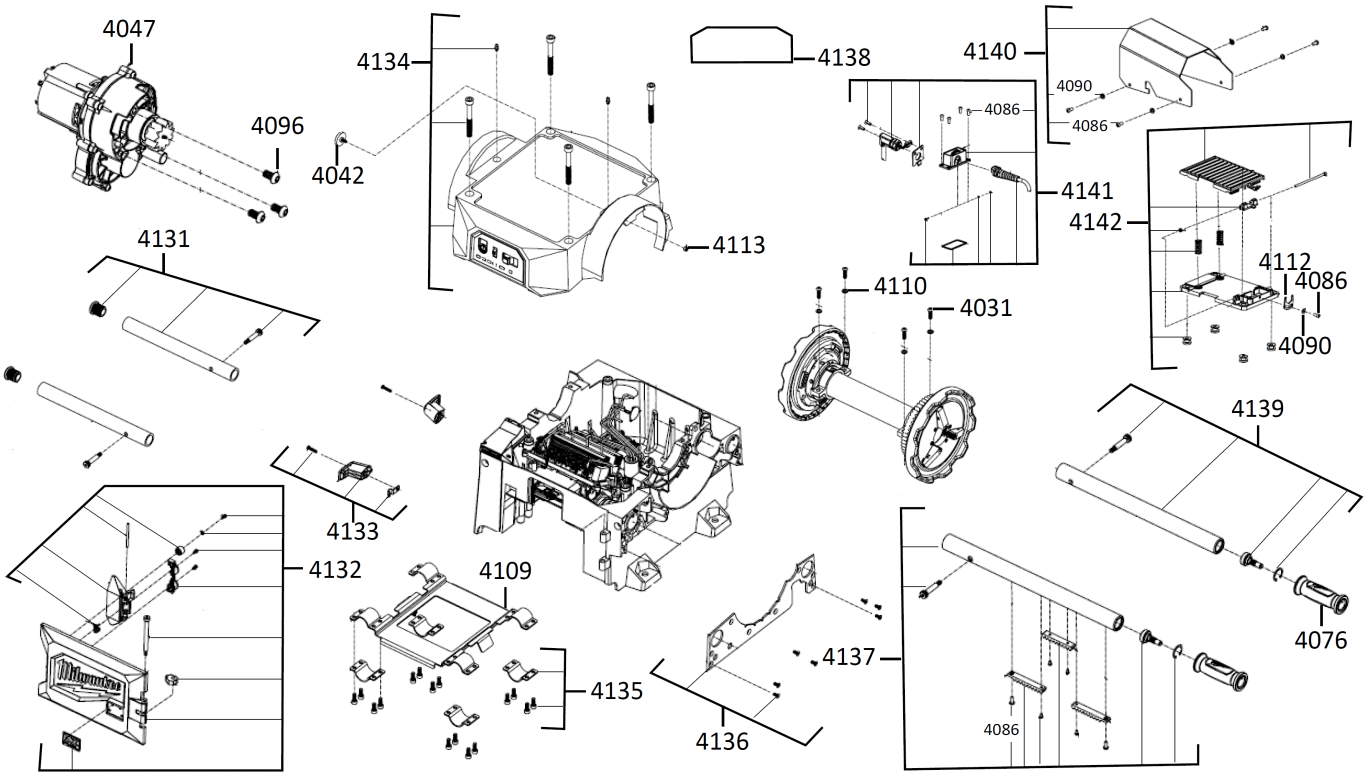
4047
4096
4042
4134
4113
4138
4140
4090
4086
4086
4141
4142
4112
4086
4090
4131
4110
4031
4139
4133
4132
4109
4135
4136
4137
4086
4076

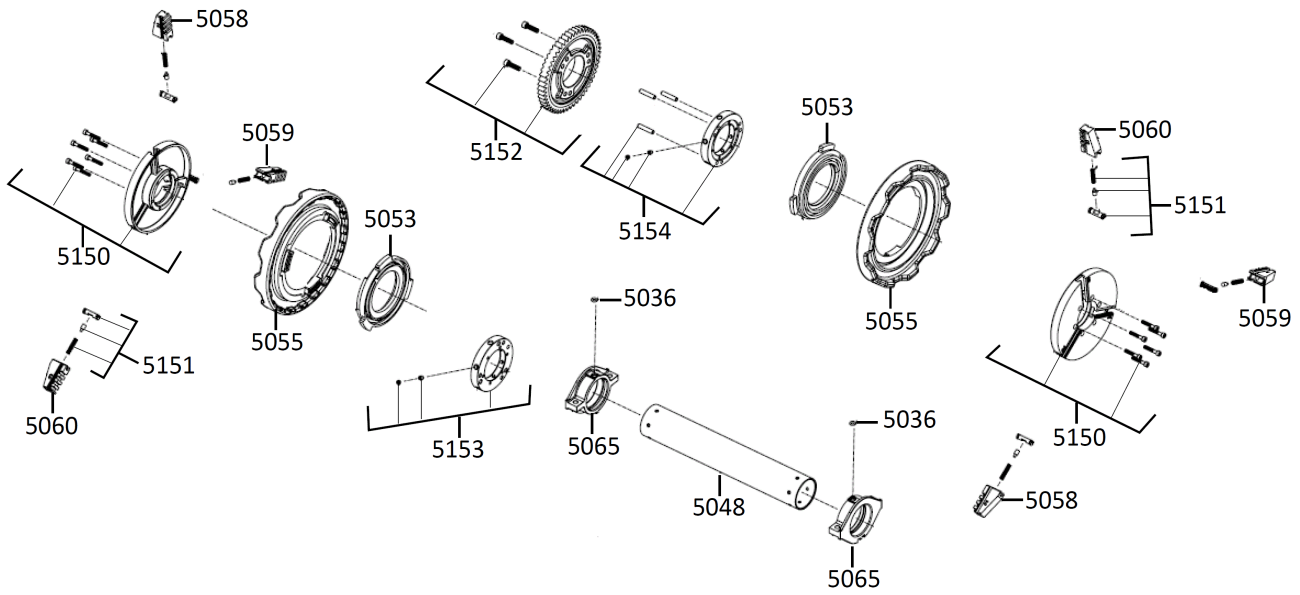
5058
5059
5053
5150
5055
5151
5060
5152
5154
5053
5055
5060
5151
5059
5036
5153
5065
5048
5036
5065
5150
5058

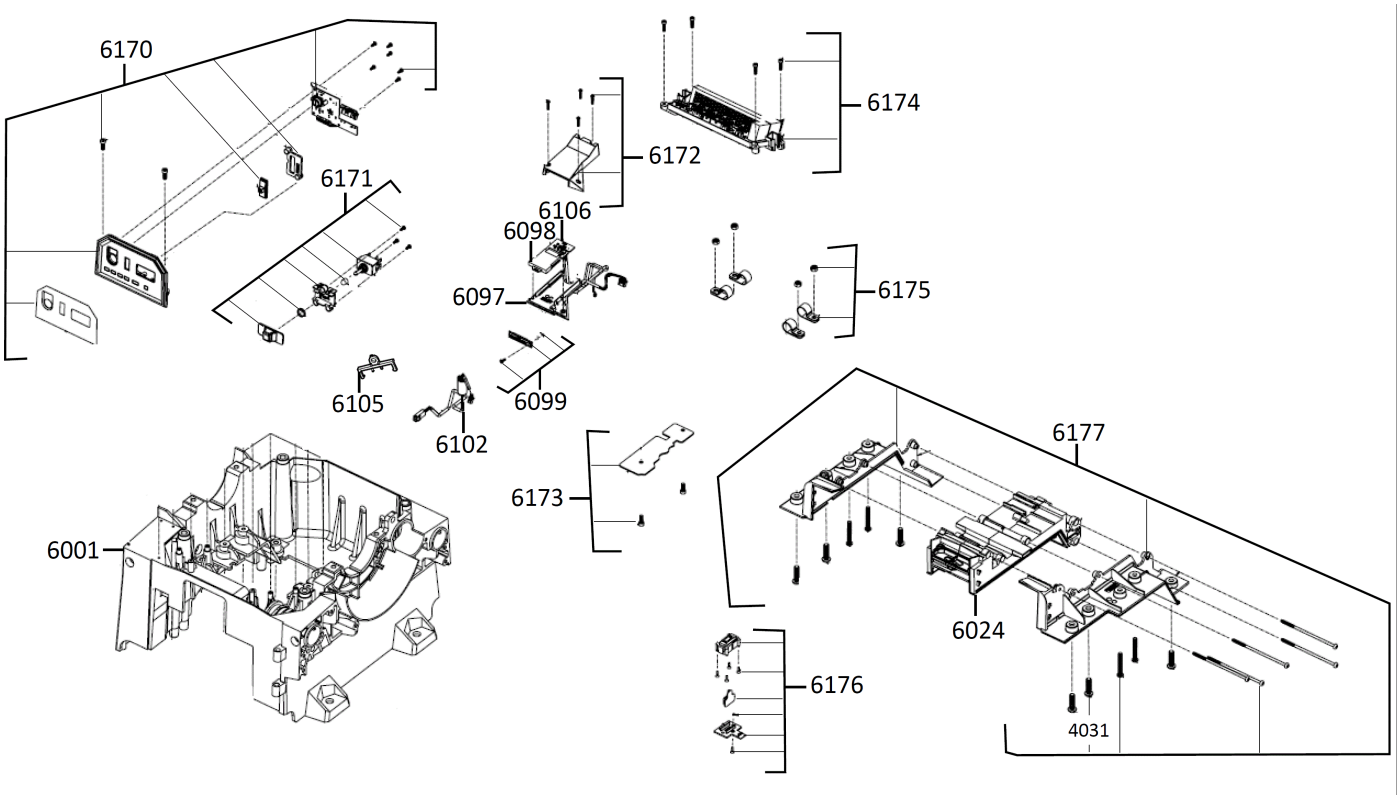
6170
6171
6174
6172
6106
6098
6097
6175
6105
6102
6099
6173
6001
6177
6024
6176
4031

Position	Quantity	Description	Part number	EAN
1001 1	8	GUARD CAP	4931496643	4058546537807
1004 2	2	RUBBER FOOT	4931496644	4058546537814
1018 3	2	GRIP PART	4931496645	4058546537821
1040 4	2	WHEEL	4931496646	4058546537838
1041 5	1	LOCK RELEASE KIT	4931496647	4058546537845
1042 6	1	SHOCK ABSORBER	4931496648	4058546537852
2032 7	1	BOLT	4931496649	4058546537869
2033 8	1	Reamer Cone for MX 2IN Pipe Threader	49165105	45242833634
2036 9	1	CUTTER	4931496650	4058546537876
2045 10	1	Pipe Cutter Wheel f. Stat. 2in Threader	48361401	45242745920
2047 11	2	BUSHING	4931496651	4058546537883
2050 12	1	PIN	4931496652	4058546537890
2055 13	1	HUB	4931496653	4058546537906
2058 14	2	SCREW	4931496654	4058546537913
2060 15	3	KNOB HANDLE	4931496655	4058546537920
2082 16	1	CUTTER	4931496656	4058546537937
2083 17	1	HANDLE SET	4931496657	4058546537944
2084 18	1	CONNECTOR	4931496658	4058546537951
2085 19	2	PIN	4931496659	4058546537968
2086 20	1	CARRIAGE	4931496660	4058546537975
2087 21	1	PIN	4931496661	4058546537982
2088 22	1	PINION	4931496662	4058546537999
2089 23	1	WHEEL	4931496663	4058546538002
2090 24	1	ROCKER ARM	4931496664	4058546538019
3001 25	1	SEAL	4931496665	4058546538026
3020 26	1	COARSE SMUT FILTER	4931496666	4058546538033
3021 27	1	TANK	4931506816	4058546561307
3022 28	17	SCREW	4931506817	4058546561314
3025 29	1	ADAPTER	4931496667	4058546538040
3031 30	1	INSERT	4931496668	4058546538057
3050 31	1	OIL PUMP	4931496669	4058546538064
3051 32	1	TUBE	4931496670	4058546538071
3052 33	1	TUBE	4931496671	4058546538088
3053 34	1	TUBE	4931496672	4058546538095
3054 35	1	LID	4931496673	4058546538101
3055 36	1	PLUG	4931496674	4058546538118
3056 37	1	HOUSING	4931506818	4058546561321
4031 38	10	SCREW	4931496675	4058546538125
4042 39	1	BOLT	4931496676	4058546538132
4047 40	1	GEAR BOX	4931496677	4058546538149
4076 41	2	HANDLE	4931496678	4058546538156
4086 42	11	SCREW	4931496679	4058546538163
4090 43	5	WASHER	4931496680	4058546538170
4096 44	3	SCREW	4931496681	4058546538187
4109 45	1	PLATE	4931496682	4058546538194
4110 46	4	WASHER	4931494491	4058546470630
4112 47	1	LOCKING PART	4931496683	4058546538200
4113 48	1	NUT	4931496684	4058546538217
4131 49	2	TUBE	4931496685	4058546538224
4132 50	1	HOUSING FOR BATTERY	4931496686	4058546538231

Position	Quantity	Description	Part number	EAN
4133 51	2	BRACKET	4931496687	4058546538248
4134 52	1	HOUSING	4931496688	4058546538255
4135 53	4	CLAMP	4931496689	4058546538262
4136 54	1	HOUSING	4931496690	4058546538279
4137 55	1	HANDLE LEFT	4931496691	4058546538286
4138 56	1	RATING PLATE	4931496692	4058546538293
4139 57	1	HANDLE RIGHT	4931496693	4058546538309
4140 58	1	GUARD	4931496694	4058546538316
4141 59	1	COVER	4931496695	4058546538323
4142 60	1	PLATE	4931496696	4058546538330
5036 61	2	BUSHING	4931496697	4058546538347
5048 62	1	GUIDE TUBE	4931496698	4058546538354
5053 63	2	BUSHING	4931496699	4058546538361
5055 64	2	CLUTCH WHEEL	4931496700	4058546538378
5058 65	2	JAW	4931496701	4058546538385
5059 66	2	JAW	4931496702	4058546538392
5060 67	2	JAW	4931496703	4058546538408
5065 68	2	BUSHING	4931496704	4058546538415
5150 69	2	GUIDE DISC	4931496705	4058546538422
5151 70	6	CLAMPING SET	4931496706	4058546538439
5152 71	1	WORM GEAR WHEEL	4931496707	4058546538446
5153 72	1	HOLDING RING	4931496708	4058546538453
5154 73	1	HOLDING RING	4931496709	4058546538460
6001 74	1	HOUSING BOTTOM	4931496710	4058546538477
6024 75	1	HOUSING FOR BATTERY	4931496711	4058546538484
6097 76	1	COVER	4931496712	4058546538491
6098 77	1	INSERT CARD	4931496713	4058546538507
6099 78	1	NAME PLATE	4931496714	4058546538514
6102 79	1	CONNECTOR	4931496715	4058546538521
6105 80	3	CLAMP CLIP	4931472938	4058546332402
6106 81	1	ELECTRONIC	4931496716	4058546538538
6170 82	1	ELECTRONIC	4931496717	4058546538545
6171 83	1	ELECTRONIC	4931496718	4058546538552
6172 84	1	COVER	4931496719	4058546538569
6173 85	1	COVER	4931496720	4058546538576
6174 86	1	ELECTRONIC	4931496721	4058546538583
6175 87	4	CABLE COLLAR	4931496722	4058546538590
6176 88	1	SWITCH BOARD	4931496723	4058546538606
6177 89	1	COVER ASSY	4931496724	4058546538613