M18BMT-0 MULTI HEADS TOOL XXX

4933446203 - M18BMT-0 - 4000446204



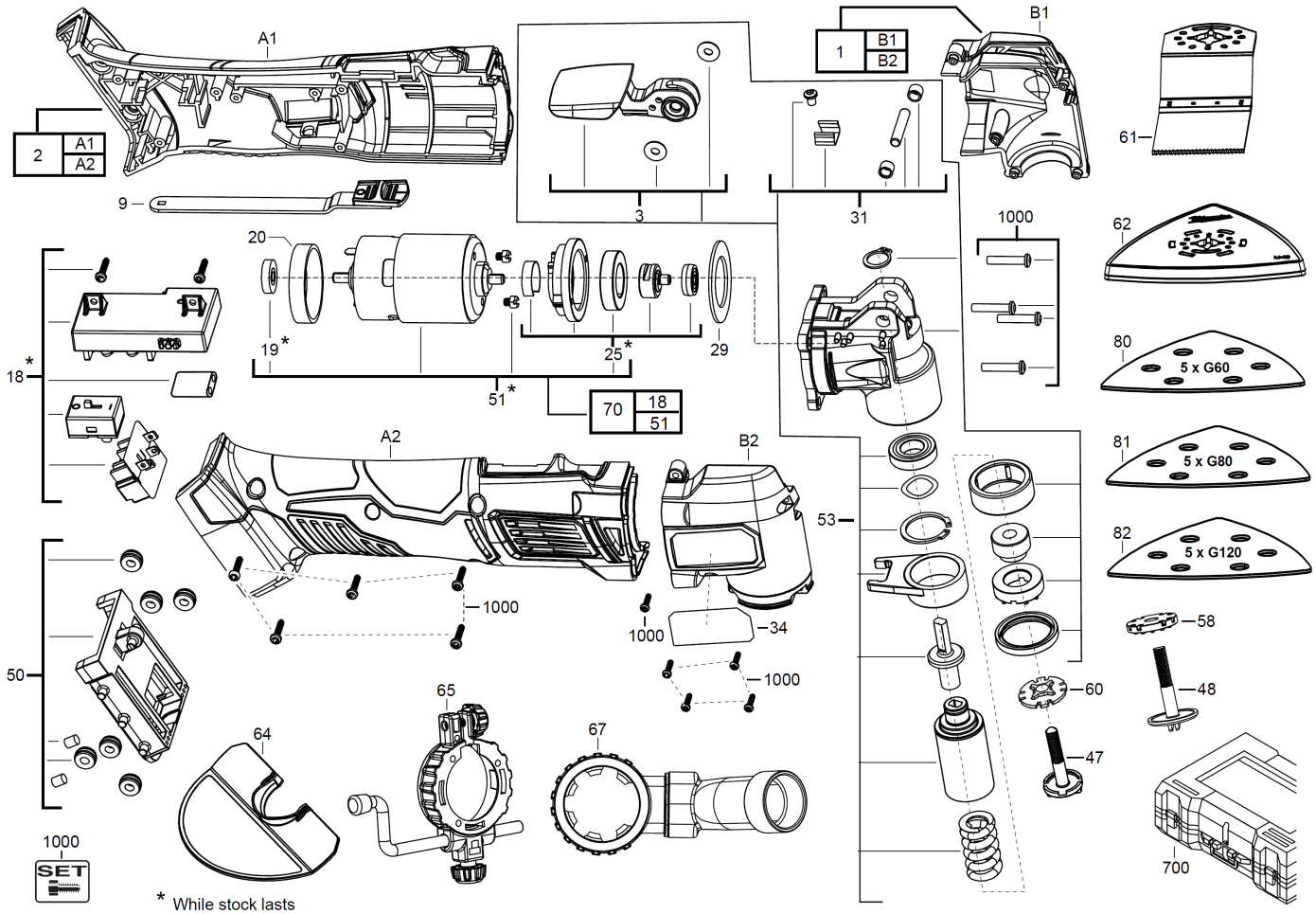
A1
2 A1 A2
9
3
1 B1 B2
B1
31
61
1000
62
20
19*
25*
29
18*
51*
70 18 51
80
5 x G60
81
5 x G80
82
5 x G120
A2
B2
53
1000
1000
34
1000
58
48
60
47
50
64
65
67
1000
SET
700
* While stock lasts

Position	Quantity	Description	Part number	EAN
0001 1	1	HOUSING CAP	4931436180	4002395878925
0002 2	1	HOUSING	4931436181	4002395878932
0003 3	1	RELEASE LEVER	4931436182	4002395881024
0009 4	1	SWITCH LEVER	Item discontinued(4931436183)	
0018 5	1	SWITCH	Item discontinued(4931436184)	
0019 6	1	MAGNETIC DISC	Item discontinued(4931436185)	
0020 7	1	RUBBER RING	4931436186	4002395878970
0025 8	1	BEARING KIT	Item discontinued(4931436187)	
0029 9	1	WASHER	4931436188	4002395878994
0031 10	1	CLAMPING SET	4931436189	4002395881031
0034 11	1	RATING PLATE	Item discontinued(4931436190)	
0047 12	1	CLAMPING SCREW	4931436191	4002395879618
0048 13	1	STRAINING SCREW	4931447570	4002395882939
0050 14	1	TERMINAL STRIP	4931436192	4002395881048
0051 15	1	MOTOR ASSEMBLY	Item discontinued(4931436193)	
0053 16	1	GEAR BOX KIT	4931436194	4002395879632
0058 17	1	CLAMPING FLANGE,Adapter	4931447571	4002395883639
0060 18	1	ADAPTER	4931447572	4002395882946
0061 19	1	SAW BLADE	4931473395	4058546352714
0062 20	1	GRINDING DISK	4931447574	4002395882960
0064 21	1	KNIFE PROTECTION	4931447578	4002395883608
0065 22	1	DEPTH GAUGE	4931447579	4002395883615
0067 23	1	DUST EXTRACTION AS.	4931447580	4002395883622
0070 24	1	MOTOR ASSEMBLY	4931452215	4002395179640
0080 25	1	SANDING PAPER	4931447575	4002395882977
0081 26	1	SANDING PAPER	4931447576	4002395882984
0082 27	1	SANDING PAPER	4931447577	4002395882991
0700 28	1	CARRYING CASE	4931447720	4002395883042
1000 29	1	SCREW	4931436195	4002395879649